# Unit: 2 Transmission Medium

In data communication system, the transmission medium is the path between transmitter and the receiver. The characteristics and quality of a data transmission are determined both by the characteristics of the medium and the characteristics of the signal. There are two categories of transmission media used in data communications are **guided** and **unguided** medium.

## Guided Medium

Guided medium creates an actual physical path between the transmitter and the receiver. The transmission capacity depends critically on the distance and on whether the medium is point to point or multipoint. There common types of Guided medium are used of the data transmission:-

- Coaxial Cable
- Twisted Pairs Cable
- Fiber Optics Cable

## Coaxial Cable

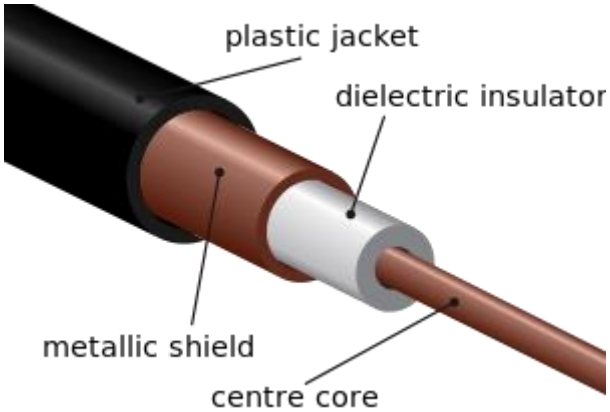


Coaxial cable has a central core conductor of solid or stranded wire (usually copper) enclosed in an insulating sheath, which is, in turn, encased in an outer conductor of metal foil, braid, or a combination of the two. The outer metallic wrapping serves both as a shield against noise and as the second conductor (ground), which completes the circuit. This outer conductor is also enclosed in an insulating sheath, and the whole cable is protected by a plastic cover.

## Transmission Characteristics of co-axial cable

Coaxial cable is used to transmit both analog and digital signals.

Coaxial cable has frequency characteristics that are superior to those of twisted pair and can hence be used effectively at higher frequencies and data rates.

Because of its shielded, concentric construction, coaxial cable is much less susceptible to interference and crosstalk than twisted pair.

For long-distance transmission of analog signals, amplifiers are needed every few kilometers, with closer spacing required if higher frequencies are used. Repeaters are needed every kilometer or so, with closer spacing needed for higher data rates.

## Twisted Pair Cable

The least expensive and mostly used guided transmission medium is twisted pair cable. Twisted pair is light weight, easy to install, inexpensive and support many different types of network. A twisted pair consists of two insulated copper wires arranged in a regular spiral pattern. A wire pair acts as a single communication link. Typically these pairs are bundled together into a cable by wrapping them in a tough protective sheath. The twisting tends to decrease the crosstalk interference between adjacent pair in a cable.

### Transmission Characteristics

It may be used to transmit both analog and digital signals.
For analog signals, amplifiers are needed about every 5 – 6 km.
Twisted pair is limited in distance, bandwidth and the data rate.
The medium is quite susceptible to interference and noise because of its easy coupling with electromagnetic fields.

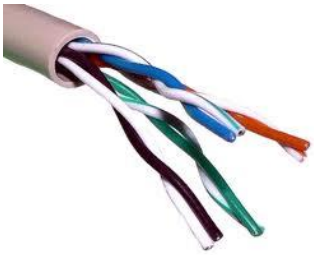

Twisted pair are further classified into STP(Shielded Twisted Pair) and UTP (Unshielded Twisted Pair) cables.

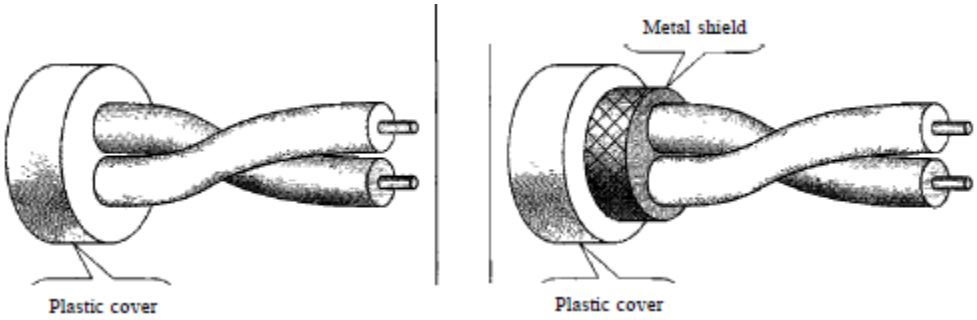

| *Category* | *Specification* | *Data Rate (Mbps)* | *Use* |
|---|---|---|---|
| 1 | Unshielded twisted-pair used in telephone | < 0.1 | Telephone |
| 2 | Unshielded twisted-pair originally used in T-lines | 2 | T-llines |
| 3 | Improved CAT 2 used in LANs | 10 | LANs |
| 4 | Improved CAT 3 used in Token Ring networks | 20 | LANs |
| 5 | Cable wire is normally 24 AWG with a jacket and outside sheath | 100 | LANs |
| SE | An extension to category 5 that includes extra features to minimize the crosstalk and electromagnetic interference | 125 | LANs |

## Fiber Optics Cable

**Fiber optics** (optical fibers) are long, thin strands of very pure glass about the diameter of a human hair. They are arranged in bundles called **optical cables** and used to transmit light signals over long distances.
Fig: Structure of Optical Fiber Cable
A single optical fiber has the following three parts:

- **Core -** Thin glass center of the fiber where the light travels
- **Cladding -** Outer optical material surrounding the core that reflects the light back into the core
- **Buffer coating -** Plastic coating that protects the fiber from damage and moisture

Hundreds or thousands of these optical fibers are arranged in bundles in optical cables. The bundles are protected by the cable's outer covering, called a **jacket**.
Optical fiber cable transmit data and information in the form of light using the principle of **Total Internal Reflection** i.e. when light travels from the medium of high density(core) to the medium of low density(cladding) with angle of incidence greater than the critical angle, the light reflects back to the same medium. This phenomenon is repeated continuously until light travels from source to the destination.

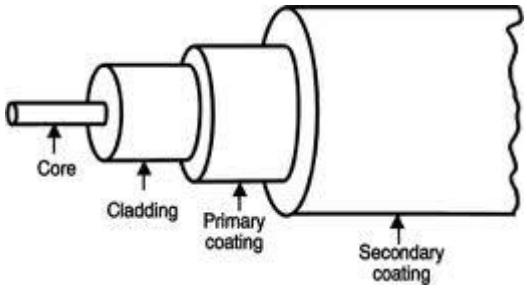

Fig: Total Internal Reflection in Optical Fiber Cable

### Characteristics of Optical fiber data transmission

- It can transfer high volume of data i.e. greater capacity
- It has lower attenuation and isolated to electromagnetic interference.
- Repeater distance is higher i.e. in the range of (30-100 Km)

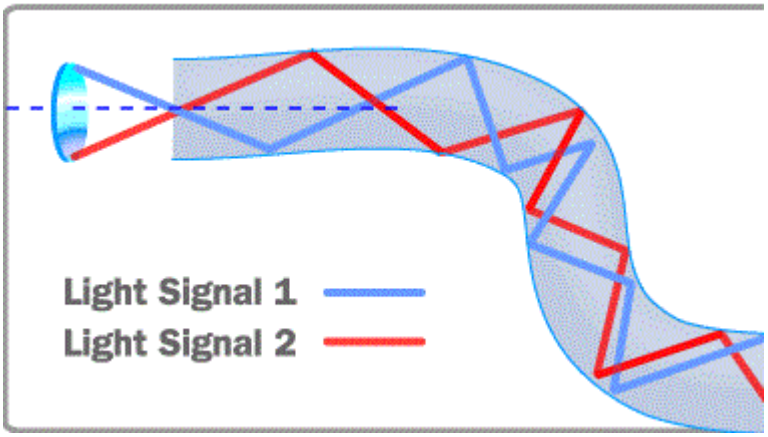


The only drawback of optical fiber is that this cable is very hard to repair if any problem arise.

### Unguided Medium

Unguided media refers to the wireless communication and various kind of waves are used to carry data signals such as Radio waves, Micro wave, Infrared etc.

### Difficulties of Unguided Transmission Medium:

- Weather interferes with signals. For instance, clouds, rain, lightning, etc. may adversely affect communication.
- Radio transmissions easy to tap. A big concern for companies worried about competitors stealing plans.
- Signals bouncing off of structures may lead to out-of-phase signals that the receiver must filter out.

### Satellite Communication

A communication satellite is, in effect, a microwave relay station. It is used to link two or more ground-based microwave transmitter/receivers, known as earth stations, or ground stations. The satellite receives transmissions on one frequency band (uplink), amplifies or repeats the signal, and transmits it on another frequency (downlink). A single orbiting satellite will operate on a number of frequency bands, called **transponder channels**, or simply **transponders**. The satellite are used to provide a point-to-point link between two distant ground-based antennas and it also provides communications between one ground-based transmitter and a number of ground-based receivers. For a communication satellite to function effectively, it is generally required that it remain stationary with respect to its position over the earth. Otherwise, it would not be within the line of sight of its earth stations at all times. To remain stationary,

the satellite must have a period of rotation equal to the earth's period of rotation. This match occurs at a height of 35,863 km at the equator.

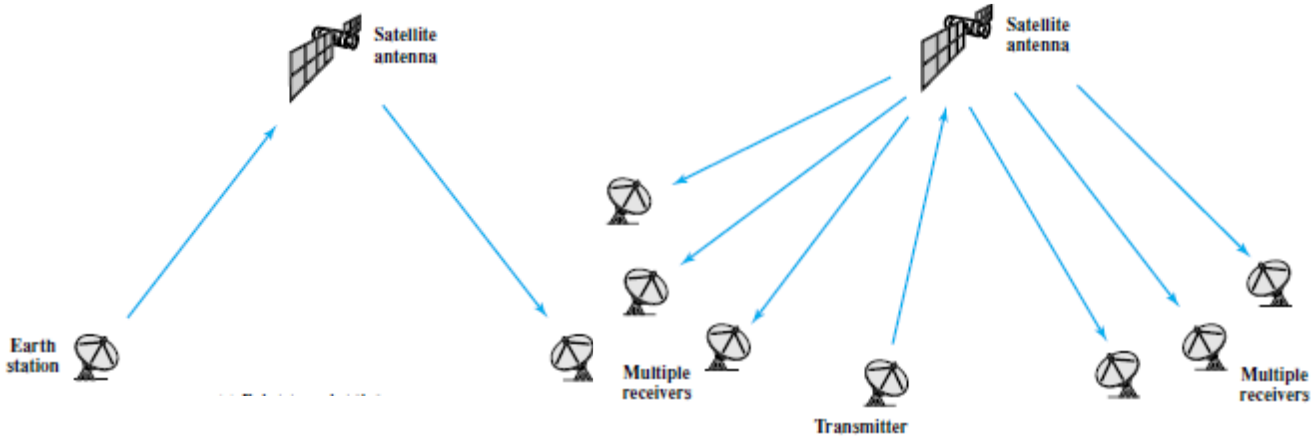


a) Point to Point link

b) Broadcast Link

c)

## VSAT Communication

VSAT stands for Very Small Aperture Terminal. It was developed to make access to the satellite more affordable and without any intermediate distribution hierarchy. Most VSAT systems operate with antenna diameter of only 1 to 2 meters and transmitting power of 1 to 2 watts. Applications of VSAT system are the Satellite Television Distribution system and Direct to Home (DTH) service as shown in Figure below, which has become very popular in recent times.

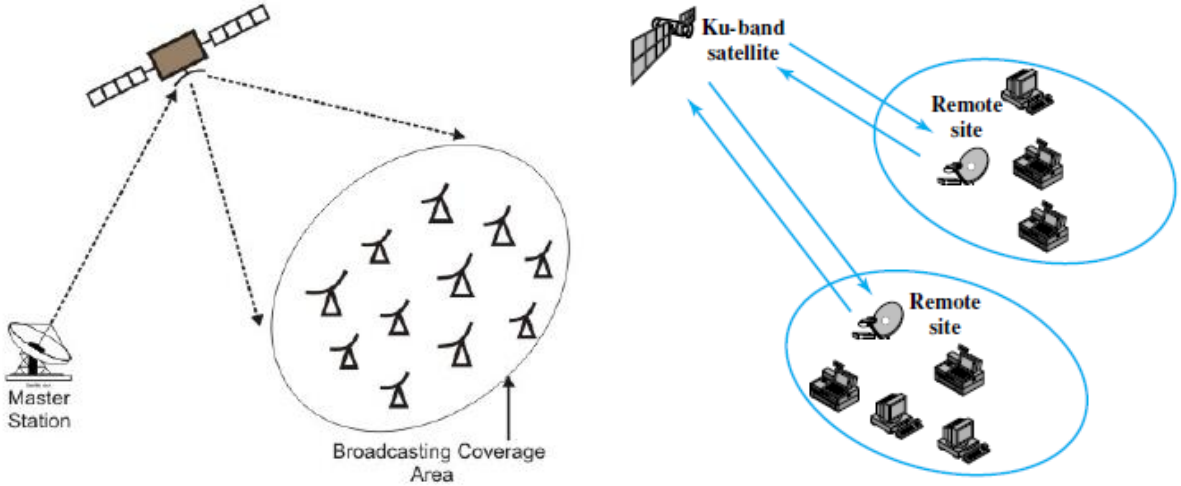


Fig: Different form of VSAT Communication System

# Unit 3: OSI reference Model and TCP/IP Reference Model

## Basic Concept of Layering

Network architectures define the standards and techniques for designing and building communication systems for computers and other devices. In the past, vendors developed their own architectures and required that other vendors conform to this architecture if they wanted to develop compatible hardware and software.

To reduce the design complexity, most of the networks are organized as a series of **layers** or **levels**, each one build upon one below it. The basic idea of a layered architecture is *to divide the design into small pieces*. Each layer adds to the services provided by the lower layers in such a manner that the highest layer is provided a full set of services to manage communications and run the applications.

A basic principle is to ensure independence of layers by defining services provided by each layer to the next higher layer without defining how the services are to be performed. This permits changes in a layer without affecting other layers. The number of layers, functions and contents of each layer differ from network to network. However in all networks, the purpose of each layer is to offer certain services to higher layers, shielding those layers from the details of how the services are actually implemented.

The basic elements of a layered model are services, protocols and interfaces. A *service* is a set of actions that a layer offers to another (higher) layer. ***Protocol*** is a set of rules that a layer uses to exchange information with a peer entity. These rules concern both the contents and the order of the messages used. Between the layers service interfaces are defined. The messages from one layer to another are sent through those interfaces.

Between each pair of adjacent layers there is an **interface**. The *interface* defines which primitives operations and services the lower layer offers to the upper layer adjacent to it.

## Why Layered architecture?

- To make the design process easy by breaking unmanageable tasks into several smaller and manageable tasks (by divide-and-conquer approach).
- Modularity and clear interfaces, so as to provide comparability between the different providers' components.
- Ensure independence of layers, so that implementation of each layer can be changed or modified without affecting other layers.
- Each layer can be analyzed and tested independently of all other layers.

## Open System Interconnection Reference Model

The Open System Interconnection (OSI) reference model describes how information from a software application in one computer moves through a network medium to a software application in another computer. The OSI reference model is a conceptual model composed of seven layers, each specifying particular network functions. The model was developed by the International Organization for Standardization (ISO) in 1984, and it is now considered the primary architectural model for inter-computer communications. The OSI model divides the tasks involved with moving information between networked computers into seven smaller, more manageable task groups. A task or group of tasks is then

assigned to each of the seven OSI layers. Each layer is reasonably self-contained so that the tasks assigned to each layer can be implemented independently. This enables the solutions offered by one layer to be updated without adversely affecting the other layers. The OSI Reference Model includes seven layers:

7. **Application Layer**
6. **Presentation Layer**
5. **Session Layer:**
4. **Transport Layer:**
3. **Network Layer:**
2. **Data-Link Layer**
1. **Physical Layer.**

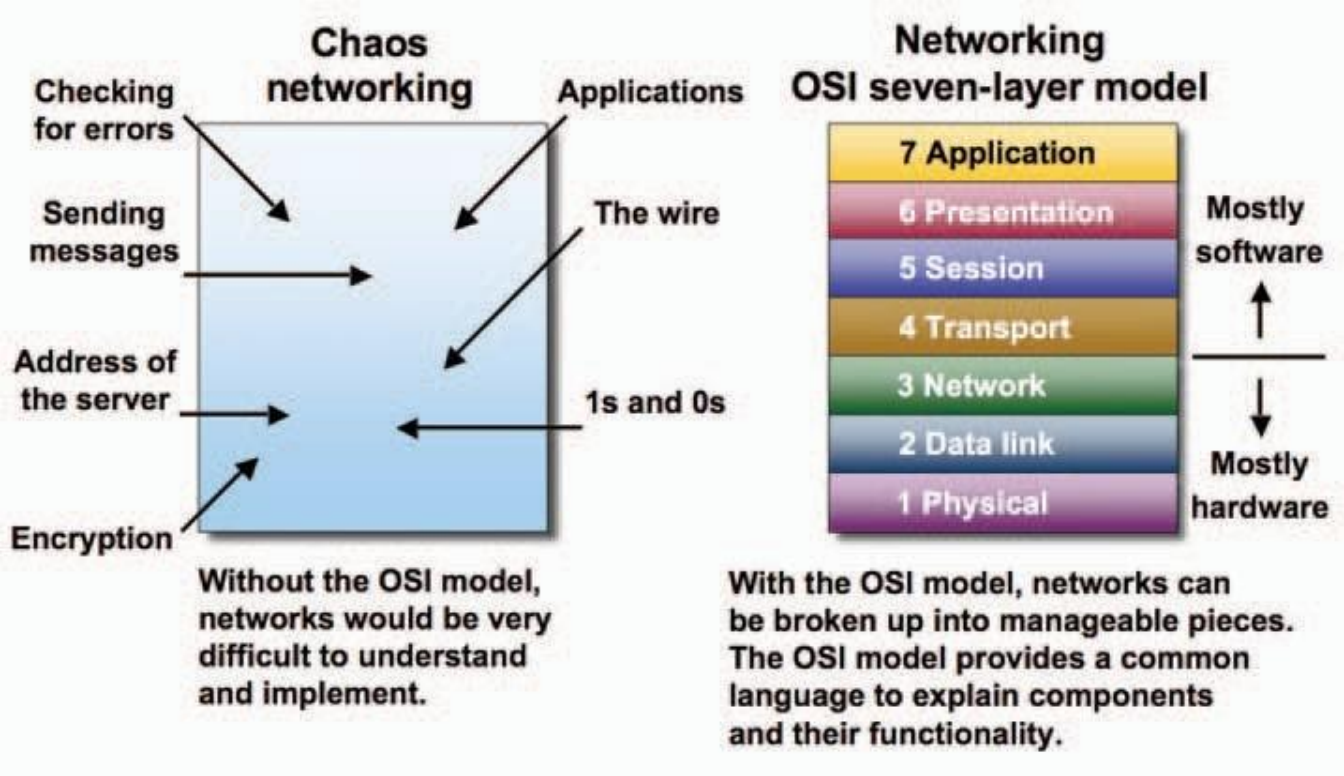


## Functions of the OSI Layers

### 1. Physical Layer

The physical layer is concerned with transmission of raw bits over a communication channel. It specifies the mechanical, electrical and procedural network interface specifications and the physical transmission of bit streams over a transmission medium connecting two pieces of communication equipment. In computer network Hub operate at physical layer. In simple term, the physical layer deals with physical transmission

### 2. Data Link Layer

The goal of the data link layer is to provide reliable, efficient communication between adjacent machines connected by a single communication channel. Specifically:

- Group the physical layer bit stream into units called frames. Note that frames are nothing more than ``packets'' or ``messages''.
- Sender calculates the checksum and sends checksum together with data. The checksum allows the receiver to determine when a frame has been damaged in transit or received correctly.
- Receiver re-computes the checksum and compares it with the received value. If they differ, an error has occurred and the frame is discarded.
- Error control protocol returns a positive or negative acknowledgment to the sender. A positive acknowledgment indicates the frame was received without errors, while a negative acknowledgment indicates the opposite.
- Flow control prevents a fast sender from overwhelming a slower receiver. For example, a supercomputer can easily generate data faster than a PC can consume it.
- In general, data link layer provides service to the network layer. The network layer wants to be able to send packets to its neighbors without worrying about the details of getting it there in one piece.

### 3. Network Layer

The basic purpose of the network layer is to provide an end-to-end communication capability in contrast to machine-to-machine communication provided by the data link layer. This end-to-end is performed using two basic approaches known as connection- oriented or connectionless network-layer services.
The network layer is responsible for routing packets from the source to destination. The *routing algorithm* is the piece of software that decides where a packet goes next (e.g., which output line, or which node on a broadcast channel).

For connectionless networks, the routing decision is made for each datagram. For connection-oriented networks, the decision is made once, at circuit setup time

### 4. Transport Layer

The transport level provides end-to-end communication between processes executing on different machines. Although the services provided by a transport protocol are similar to those provided by a data link layer protocol, there are several important differences between the transport and lower layers:

- Confirmation that the entire message arrived intact
- Segmentation of data for network transport
- Control of data flow to prevent memory overruns
- Establishment and maintenance of both ends of virtual circuits
- Transmission error detection
- Realignment of segmented data in the correct order on the receiving side
- Multiplexing or sharing of multiple sessions over a single physical link

The most common transport layer protocols are the connection-oriented TCP Transmission Control Protocol (TCP) and the connectionless UDP User Datagram Protocol (UDP).

### 5. Session Layer

This layer allows users on different machines to establish session between them. A session allows ordinary data transport but it also provides enhanced services useful in some applications. A session may be used to allow a user to log into a remote time sharing machine or to transfer a file between two machines.

### 6. Presentation Layer

This layer is concerned with Syntax and Semantics of the information transmitted, unlike other layers, which are interested in moving data reliably from one machine to other. Few of the services that Presentation layer provides are:

- Encoding data in a standard agreed upon way.
- It manages the abstract data structures and converts from representation used inside computer to network standard representation and back.

### 7. Application Layer

The application layer consists of what most users think of as programs. The application does the actual work at hand. Although each application is different, some applications are so useful that they have become standardized. The Internet has defined standards for:

- File transfer (FTP): Connect to a remote machine and send or fetch an arbitrary file. FTP deals with authentication, listing a directory contents, ASCII or binary files, etc.
- Remote login (telnet): A remote terminal protocol that allows a user at one site to establish a TCP connection to another site, and then pass keystrokes from the local host to the remote host.
- Mail (SMTP): Allow a mail delivery agent on a local machine to connect to a mail delivery agent on a remote machine and deliver mail.
- `Web (HTTP): Base protocol for communication on the World Wide Web.

## TCP/IP (Transmission Control Protocol/Internet Protocol) Protocol Suite

The protocol stack used on the Internet is the Internet Protocol Suite. It is usually called TCP/IP after two of its most prominent protocols, but there are other protocols as well. The *TCP/IP model* is based on a five-layer model for networking. Not all layers are completely defined by the model, so these layers are “filled in” by external standards and protocols.

The TCP/IP stack is comprised of modules. Each module provides a specific function, but the modules are fairly independent. The TCP/IP layers contain relatively independent protocols that can be used depending on the needs of the system to provide whatever function is desired. In TCP/IP, each higher layer protocol is supported by lower layer protocols.

### The TCP/IP Layers

The TCP/IP protocol stack models a series of protocol layers for networks and systems that allows communications between any types of devices. The model consists of five separate layers, as shown in Figure. The Internet protocol suite is based on these five layers. TCP/IP says most about the network and

transport layers, and a lot about the application layer. TCP/IP also defines how to interface the network layer with the data link and physical layers, but is not directly concerned with these two layers themselves.

**5. Application Layer**
**4. Transport Layer:**
**3. Network Layer:**
**2. Data-Link Layer**
**1. Physical Layer.**

In TCP/IP, as with most layered protocols, the most fundamental elements of the process of sending and receiving data are collected into the groups that become the layers. Each layer's major functions are distinct from all the others, but layers can be combined for performance reasons. Each implemented layer has an *interface* with the layers above and below it (except for the application and physical layers, of course) and provides its defined service to the layer above and obtains services from the layer below. In other words, there is a *service interface* between each layer, but these are not standardized and vary widely by operating system.

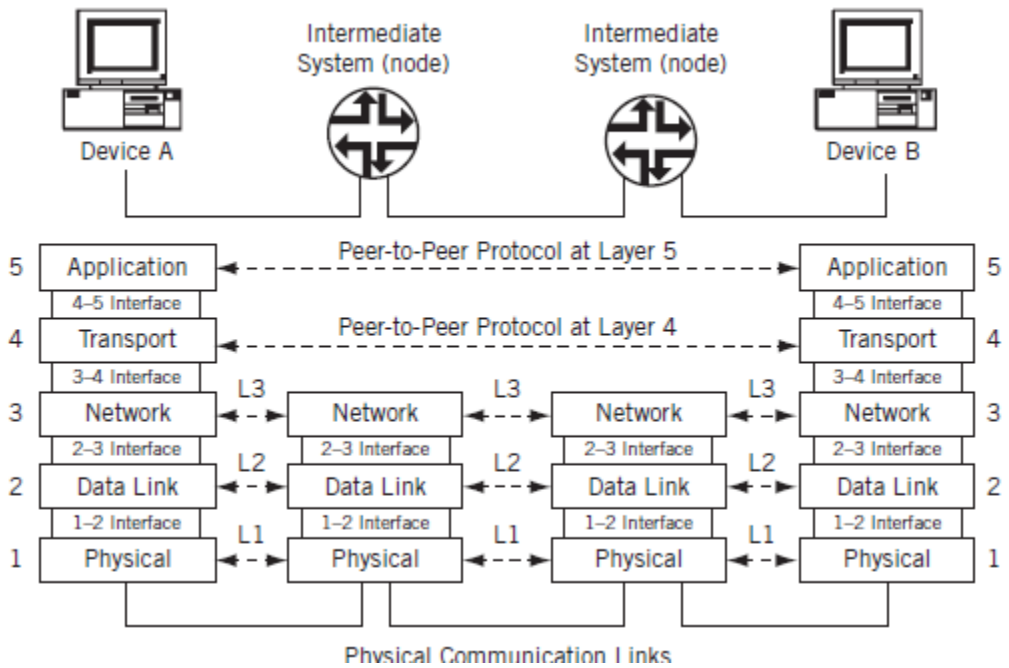


Fig: Layers and their interaction in TCP/IP Model

## Encapsulation

Each layer uses encapsulation to add the information its peer needs on the receiving system. The network layer adds a header to the information it receives from the trans- port at the sender and passes the whole unit down to the data link layer. At the receiver the network layer looks at the control information, usually in a *header*, in the data it receives from the data link layer and passes the remainder up to the transport layer for further processing. This is called encapsulation because one layer has no idea what the structure or meaning of the PDU is at other layers. The PDU has several more or less official names for the structure at each layer.

The exception to this general rule is the data link layer, which adds both a *header* and a *trailer* to the data it receives from the network layer. The general flow of encapsulation in TCP/IP is shown in Figure. Note that on the transmission media itself (or communications link), there are only bits, and that some "extra" bits are added by the communication link for its own purposes.

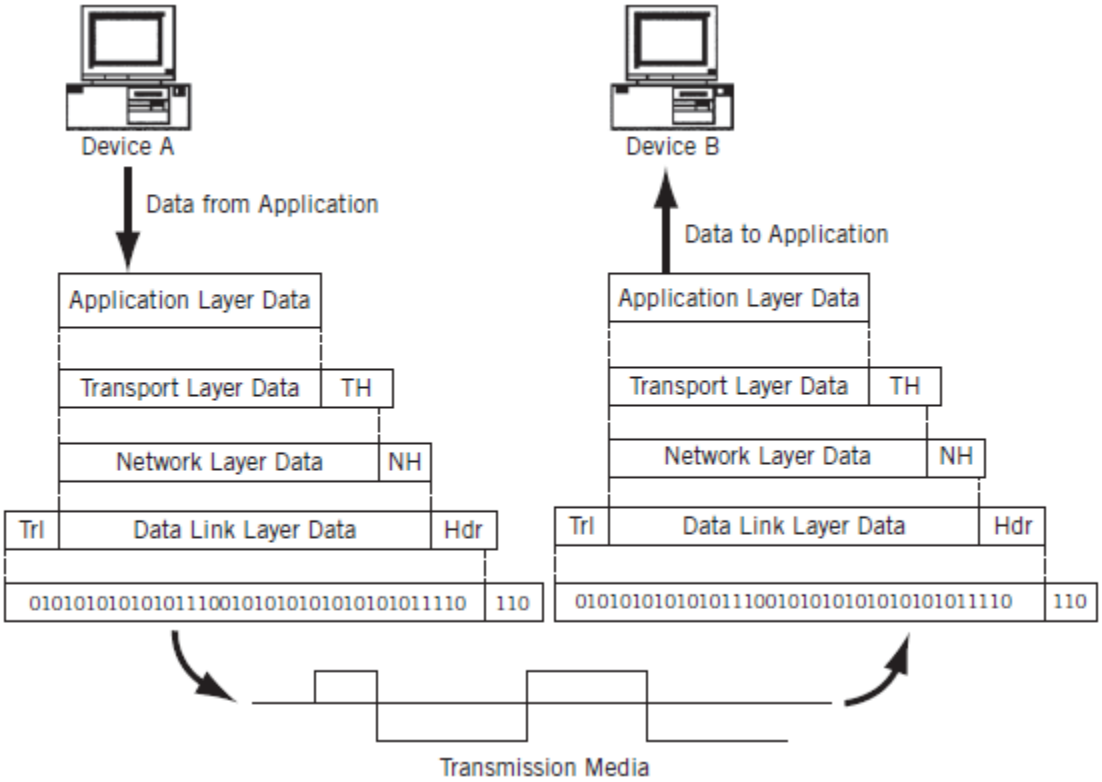


Fig: Encapsulation of data in TCP/IP

## Review Questions

### Q-1. Why it is necessary to have layering in a network?

A computer network is a very complex system. It becomes very difficult to implement as a single entity. The layered approach divides a very complex task into small pieces each of which is independent of others and it allow a structured approach in implementing a network. The basic idea of a layered architecture is *to divide the design into small pieces*. Each layer adds to the services provided by the lower layers in such a manner that the highest layer is provided a full set of services to manage communications and run the applications.

### Q-2. What are the key benefits of layered network?

Main benefits of layered network are given below:

- Complex systems can be broken down into understandable subsystems.
- Any facility implemented in one layer can be made visible to all other layers.
- Services offered at a particular level may share the services of lower level.
- Each layer may be analyzed and tested independently.
- Layers can be simplified, extended or deleted at any time.
- Increase the interoperability and compatibility of various components build by different vendors.

### Q-3. What do you mean by OSI?

The Open System Interconnection (OSI) reference model describes how information from a software application in one computer moves through a network medium to a software application in another computer. The OSI reference model is a conceptual model composed of seven layers, each specifying particular network functions. The model was developed by the International Standardization Organization (ISO) in 1984, and it is now considered the primary architectural model for inter-computer communications.

### Q-4. Briefly write functionalities of different TCP/IP layers.

The Internet Protocol Suite, popularly known as the TCP/IP model, is a communication protocol that is used over the Internet. This model divides the entire networking functions into layers, where each layer performs a specific function.

**Physical Layer:** The physical layer is concerned with transmission of raw bits over a communication channel.

**Data Link Layer:** As the name suggests, this layer includes the physical and logical connections from the host's link. It is also known as Network Access layer and Network Interface layer. It explains how the data is transmitted from the host, through the network. The physical connectors like the coaxial cables, twisted pair wires, the optical fiber, interface cards, etc., are a part of this layer. This layer can be used to connect different network types like ATM, Token ring, Ethernet, LAN, etc.

**Network Layer:** This layer is also known as the Network Layer. The main function of this layer is to route the data to its destination. The data that is received by the link layer is made into data packets (IP datagrams). The data packets contain the source and the destination IP address or logical address. These packets are sent on any network and are delivered independently. This indicates that the data is not received in the same order as it was sent. The protocols at this layer are IP (Internet Protocol), ICMP (Internet Control Message Protocol), etc.

**Transport Layer:** This layer is responsible for providing datagram services to the Application layer. This layer allows the host and the destination devices to communicate with each other for exchanging messages, irrespective of the underlying network type. Error control, congestion control, flow control, etc., are handled by the transport layer. The protocol that this layer uses is TCP (Transmission Control Protocol) and UDP (User Datagram Protocol). TCP gives a reliable, end-to-end, connection-oriented data transfer, while UDP provides unreliable, connectionless data transfer between two computers.

**Application Layer:** It provides the user interface for communication. This is the layer where email, web browsers or FTP run. The protocols in this layer are FTP, SMTP, HTTP, etc**.**

### Q-5. How two adjacent layers communicate in a layered network? (Or what do you mean by Service Access Point?)

In layered network, each layer has various entities and entities of layer i provide service to the entities of layer i+1. The services can be accessed through service access point (SAP), which has some address through which the layer i+1 will access the services provided by layer i.

### Q-6. What are the key functions of data link layer?

Data link layer transfers data in a structured and reliable manner so that the service provided by the physical layer is utilized by data link layer. Main function of data link layer is framing and media access control.

### Q-7. What do you mean by Protocol?

In the context of data networking, a **protocol** *is a formal set of rules and conventions that governs how computers exchange information over a network medium*. A protocol implements the functions of one or more layer.

### Q-8. What is Fundamental Difference between TCP/IP and ISO model?

| **TCP/IP Model** | **OSI Model** |
|---|---|
| Implementation of OSI model | Reference model |
| Model around which Internet is developed | This is a theoretical model |
| Has only 5 layers | Has 7 layers |
| Considered more reliable | Considered a reference tool |
| Protocols are not strictly defined | Stricter boundaries for the protocols |
| Horizontal approach | Vertical approach |
| Combines the session and presentation layer in the application layer | Has separate session and presentation layer |
| Protocols were developed first and then the model was developed | Model was developed before the development of protocols |
| Supports only connectionless communication in the network layer | Supports connectionless and connection-oriented communication in the network layer |
| Protocol dependent standard | Protocol independent standard |